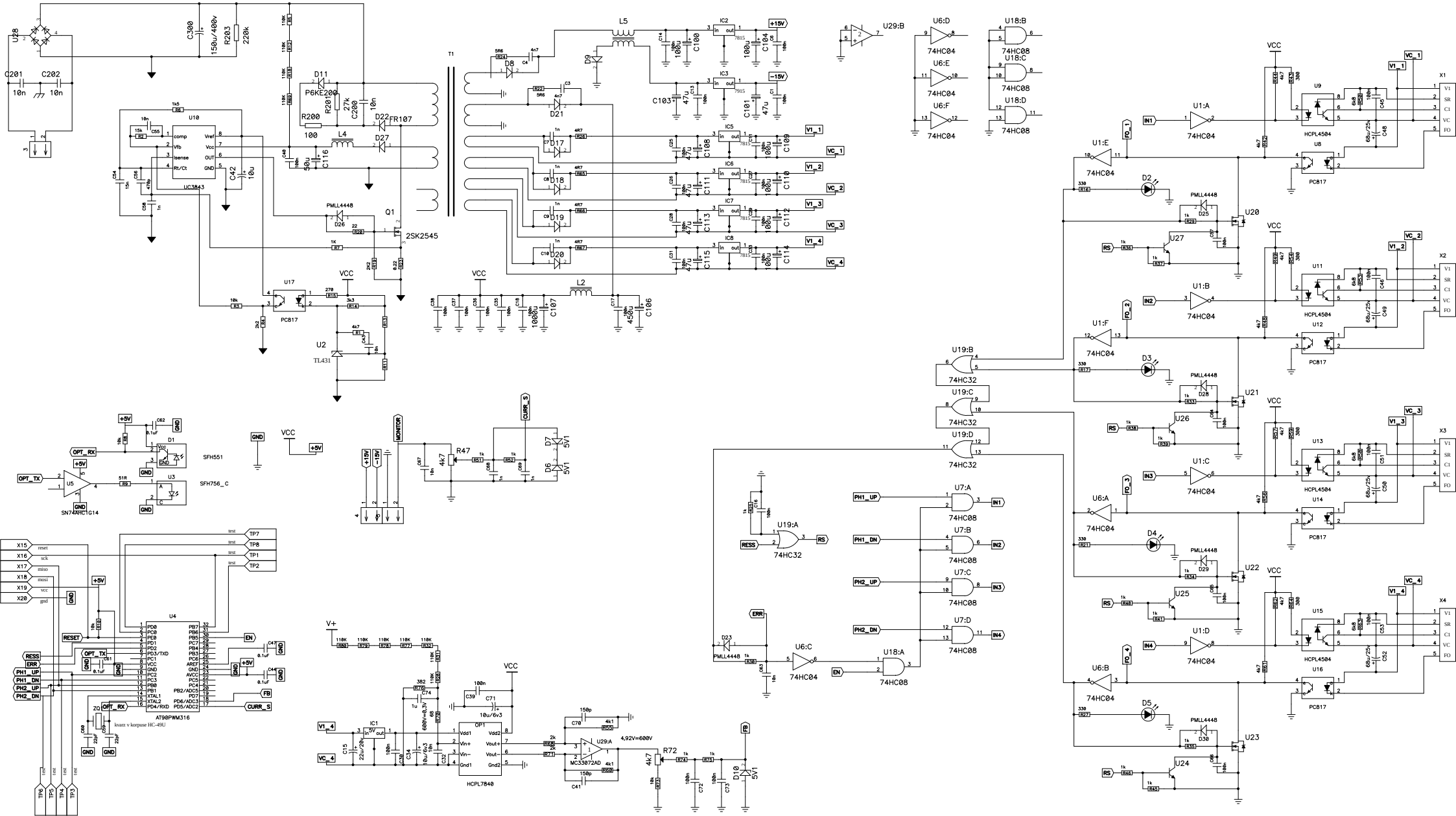

U28
C300
150u/400v
R203
220k
C201
10n
C202
10n
U10
UC3843
D11
P6KE200
R201
27k
C200
10n
R200
100
D22
FR107
L4
D27
C116
50u
C42
10u
PMLL4448
D26
Q1
2SK2545
U17
PC817
U2
TL431
T1
D8
D9
D21
D17
D18
D19
D20
L5
L2
C107
1000u
C106
450u
IC2
IC3
IC5
IC6
IC7
IC8
+15V
-15V
C100
C104
C103
47u
C101
47u
C108
C109
C111
C110
C113
C112
C115
C114
V1_1
V1_2
V1_3
V1_4
VC_1
VC_2
VC_3
VC_4
U29:B
U6:D
U6:E
U6:F
74HC04
U18:B
U18:C
U18:D
74HC08
VCC
U1:A
U1:B
U1:C
U1:D
U1:E
U1:F
U6:A
U6:B
U6:C
U19:A
U19:B
U19:C
U19:D
74HC32
U7:A
U7:B
U7:C
U7:D
PH1_UP
PH1_DN
PH2_UP
PH2_DN
RESS
ERR
EN
FB
CURR_S
MONITOR
R47
4k7
D7
5V1
D6
5V1
U5
SN74AHC1G14
OPT_RX
OPT_TX
SFH551
SFH756_C
U4
AT90PWM316
kvarz v korpuse HC-49U
X15
X16
X17
X18
X19
X20
reset
sck
miso
mosi
vcc
gnd
RESET
TP7
TP8
TP1
TP2
TP6
TP5
TP4
TP3
V+
IC1
OP1
HCPL7840
U29:A
MC33072AD
4,92V=600V
R72
4k7
D10
5V1
U9
U8
U11
U12
U13
U14
U15
U16
U20
U21
U22
U23
U24
U25
U26
U27
HCPL4504
PC817
X1
X2
X3
X4
V1
SR
C1
VC
FO